illus
ILLUMINATION

LED
PRO



LED PENDANT LINEAR LIGHT LUMINAIRE SERIES

PRODUCT INFORMATION

- The Illus linear LED pendant luminaire offers exceptional versatility with adjustable power and selectable CCT, allowing you to customize light output and color temperature to suit a wide range of applications and user preferences.
- These fixtures deliver energy efficiency of LED technology while offering superior flexibility and precise control.
- The LED linear pendant luminaire consists of 14 models with lumen packages from 5000lm to 7000lm at 3000K.

BENEFITS

- Selectable wattage settings allow easy adjustment of brightness to suit different spaces and activities, from task lighting to ambient illumination.
- Brightness can be selected to adapt to the changing needs or interior designs.
- One fixture replaces multiple models, reducing inventory complexity while ensuring the right solution is always available.
- It ensures seamless integration with existing lighting for a cohesive, aesthetically pleasing space.
- With an extended lifespan, these luminaires minimize maintenance and replacement costs versus traditional lighting sources.

FEATURES

- Flicker Free.
- High CRI≥95.
- Energy Saving.
- Non-Dimmable.
- Long Lifespan 30000H.
- Efficacy up to 117lm/W.
- Operating Voltage AC220-240V.

CE RoHS

BEYOND LIGHT..
TO THE LAST DETAILS!

AREAS OF APPLICATION

Hospitality

Shopping Center

Commercial

Educational Center



TECHNICAL OPERATING & ELECTRICAL DATA

Body Material	Galvanized Steel
CCT	CCT Tunable (3000K/4000K/5700K)
CRI	>95
Voltage and Frequency	AC220-240V, 50/60Hz
Beam Angle	90°
Ambient Temperature	45°C
IP Rating	IP20
Dimming	Non-Dimmable
Lifespan	30,000H
Switching Cycle	100,000x on/off
Warranty Period	36 Months

SPECIFICATIONS

Code No.	Body Color	Efficiency	mA	Power	Lumen	D.F	P.F	Current
LI615729	Matt White	114Lm/W	220	50W	5700lm	0.98	0.97	0.22
LI615730	Matt Black	114Lm/W	220	50W	5700lm	0.98	0.97	0.22
LI615731	Matt White	117Lm/W	250	60W	7000lm	0.98	0.97	0.25
LI615732	Matt Black	117Lm/W	250	60W	7000lm	0.98	0.97	0.25

DIMENSIONS

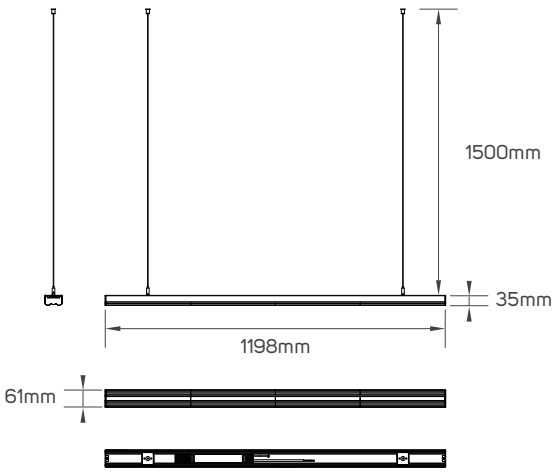

LI615729 - LI615730

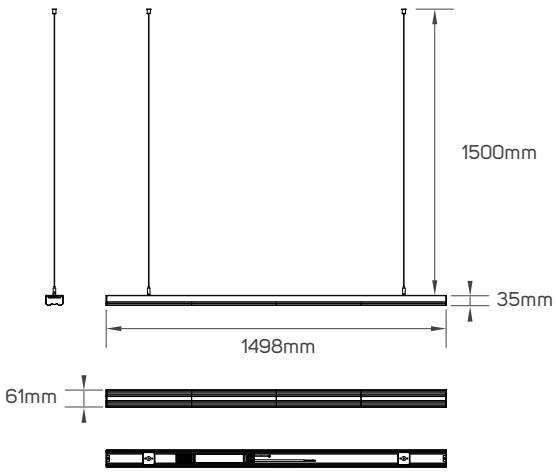

LI615731 - LI615732

APPLICATION PICTURE



This image is for display purpose only, the image may differ from the actual product, as the product is subject to modification provided without prior notice.

LED PENDANT LINEAR LIGHT LUMINAIRE SERIES

**BEYOND LIGHT..
TO THE LAST DETAILS!**

build-station lighting stores illus lighting

C/ Cuenca, 87, Alaquas 46970, (Valencia) Spain, Ph. 34 961 623 958 www.illusillumination.com

illus illumination reserve the right to make dimensional, design and technical alternations without prior notice. illus illumination endeavor to ensure that any advice, recommendation or information it provides in product literature is accurate and correct. However due to the fact that illus do not have direct control on where and how the products are installed, illus illumination cannot accept any liability either direct or indirect arising from the use of illus products whether or not in accordance with any advice, specification, recommendation or information provided by illus illumination or its distributors.

1119202IV1