illus
ILLUMINATION

LED
PRO



LED INGROUND LUMINAIRE

PRODUCT INFORMATION

- The illus Inground GU10 holders are durable, weatherproof lighting fixtures designed to securely house GU10 base lamps - typically LED bulbs - for reliable outdoor use.
- They provide functional ground-level illumination for landscapes, pathways, and driveways, enhancing visibility and safety while allowing discreet inground installation.
- The Illus inground luminaire offers flexibility through interchangeable round and square cover options, both compatible with a single housing design.

BENEFITS

- Ideal for uplighting architectural features, trees, shrubs, stone walls, and water features, enhancing textures and visual depth in nighttime landscapes.
- Inground lights provide essential illumination for paths, driveways, steps, and garden areas, improving nighttime safety and enhancing security.
- The robust, corrosion-resistant construction (stainless steel and aluminum) ensures durability in harsh outdoor conditions with minimal maintenance.

FEATURES

- IK Rating IK08.
- Max. Wattage 9W.
- Holder Type GU10.
- IP Rating IP65 & IP67.
- Input Voltage AC220-240V.

CE RoHS

BEYOND LIGHT..
TO THE LAST DETAILS!

AREAS OF APPLICATION

Hospitality

Shopping Center

Commercial

Educational Center



TECHNICAL OPERATING & ELECTRICAL DATA

Voltage and Frequency	AC220-240V, 50/60Hz
Ambient Temperature	-20°C~45°C
IP Rating	IP65&67
IK Rating	IK08
IEC Classification	Class I
Dimming	Non-Dimmable
Holder Type	GU10
Lifespan	30,000H
Switching Cycle	100,000x on/off
Warranty Period	36 Months

SPECIFICATION

Code No.	Model No.	Body Color	Body Material	Power	Cutting Size
LI612175	ILSRMOIGF01	Black + Silver	Aluminum	Max.9W	D102mm

DIMENSION

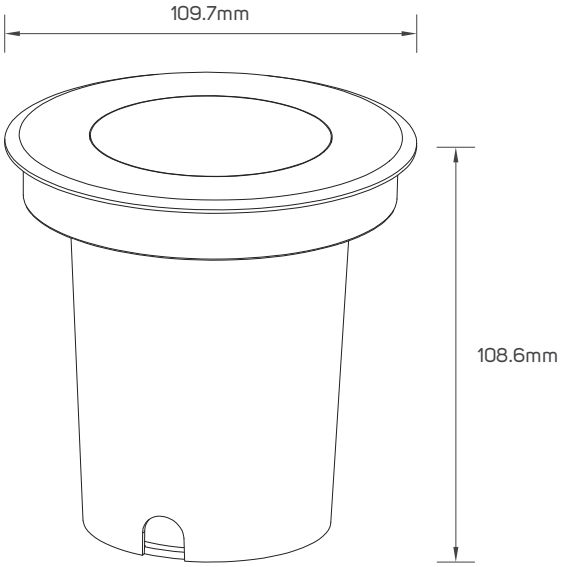

ACCESSORY SPECIFICATION

Code No.	Model No.	Body Color	Body Material	Warranty
LI521340	ILSRMOIGSF01	Silver	Stainless Steel	36 Months

ACCESSORY DIMENSION

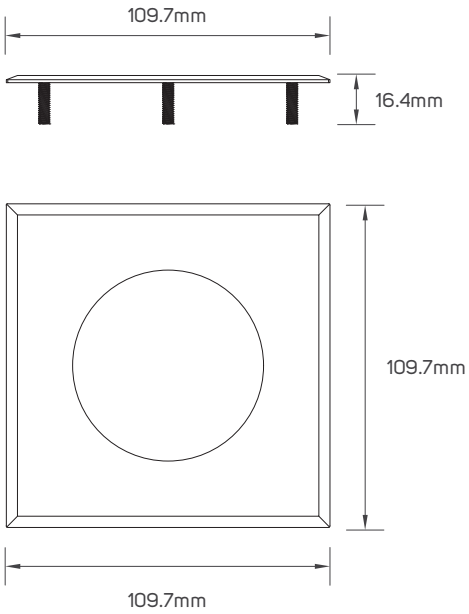

LI521340

APPLICATION PICTURE



This image is for display purpose only, the image may differ from the actual product, as the product is subject to modification provided without prior notice.

LED INGROUND LUMINAIRE

**BEYOND LIGHT..
TO THE LAST DETAILS!**

build-station lighting stores illus lighting

C/ Cuenca, 87, Alaquas 46970, (Valencia) Spain, Ph. 34 961 623 958 www.illusillumination.com

illus illumination reserve the right to make dimensional, design and technical alternations without prior notice. illus illumination endeavor to ensure that any advice, recommendation or information it provides in product literature is accurate and correct. However due to the fact that illus do not have direct control on where and how the products are installed, illus illumination cannot accept any liability either direct or indirect arising from the use of illus products whether or not in accordance with any advice, specification, recommendation or information provided by illus illumination or its distributors.

11192021V1