illus
ILLUMINATION

LED
PRO



LED IN-GROUND LUMINAIRE SERIES

PRODUCT INFORMATION

- Excellently anti-dust LED with professional design to guarantee lighting performance.
- It not only ensures high quality of lighting color consistency but also protect products against from harsh environments.
- ILLUS LED Wall Grazer Luminaire gives the customer the flexibility to choose between 3 models based on their specific need with lumen package from 300lm to 1200lm.

BENEFITS

- Vivid light color.
- Less maintenance cost and less concerns.
- Equipped with surge protection function.

FEATURES

- High CRI>85.
- Non–Dimmable.
- Good Impact Rating.
- Long lifespan 50000H.
- Operating voltage AC220-240V.

CE RoHS

BEYOND LIGHT..
TO THE LAST DETAILS!

AREAS OF APPLICATION

Hospitality

Shopping Center

Commercial

Educational Center



TECHNICAL OPERATING & ELECTRICAL DATA

Body Color	Silver + Black
Body Material	Stainless steel + Aluminum
CCT	3000K
CRI	>85
Voltage & Frequency	AC220-240V, 50/60Hz
Ambient Temperature	-20°C~45°C
IP Rating	IP67
Electrical Classification	Class I
Beam Angle	70°
Dimming	Non-Dimmable
Switching Cycle	100000x on/off
Lifespan	50000H
Warranty Period	36 Months

SPECIFICATIONS

Code No.	Model No.	Lumen	Wattage	D.F	P.F	Current
LI615708	ILS09AWGLL830WW02	300lm	10W	0.92	0.45	0.086
LI615709	ILS24AWGLL830WW02	700lm	18W	0.97	0.46	0.18
LI615710	ILS30AWGLL830WW02	1200lm	36W	0.97	0.5	0.3

DIMENSIONS

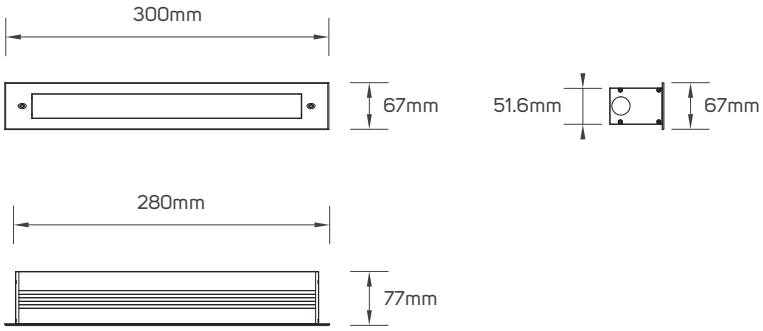

LI615708 (Cutting Size-L282*W53.6)

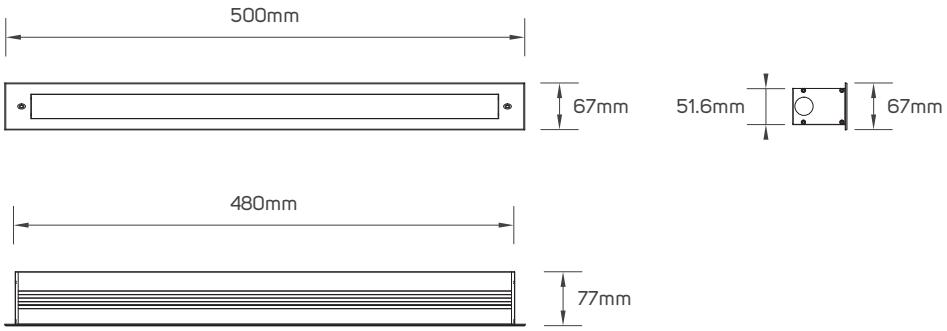

LI615709 (Cutting Size-L482*W53.6)

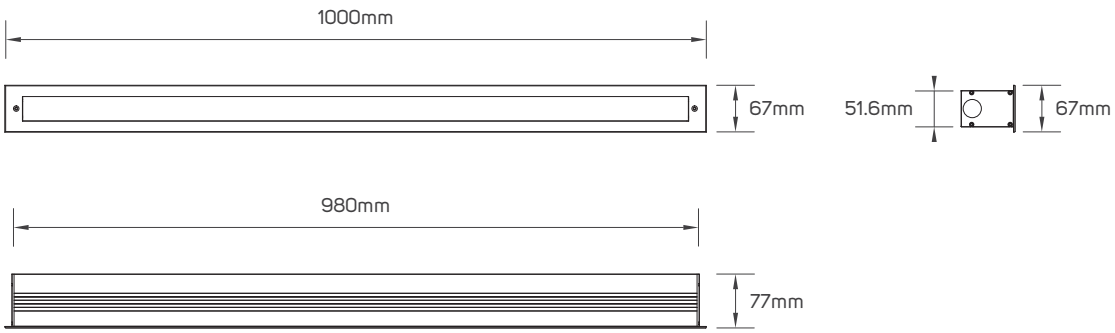

LI615710 (Cutting Size-L982*W53.6)

APPLICATION PICTURE



This image is for display purpose only, the image may differ from the actual product, as the product is subject to modification provided without prior notice.

LED WALL WASHER LUMINAIRE SERIES

**BEYOND LIGHT..
TO THE LAST DETAILS!**

build-station lighting stores illus lighting

C/ Cuenca, 87, Alaquas 46970, (Valencia) Spain, Ph. 34 961 623 958 www.illusillumination.com

illus illumination reserve the right to make dimensional, design and technical alternations without prior notice. illus illumination endeavor to ensure that any advice, recommendation or information it provides in product literature is accurate and correct. However due to the fact that illus do not have direct control on where and how the products are installed, illus illumination cannot accept any liability either direct or indirect arising from the use of illus products whether or not in accordance with any advice, specification, recommendation or information provided by illus illumination or its distributors.

1119202IV1