illus
ILLUMINATION

LED
PRO

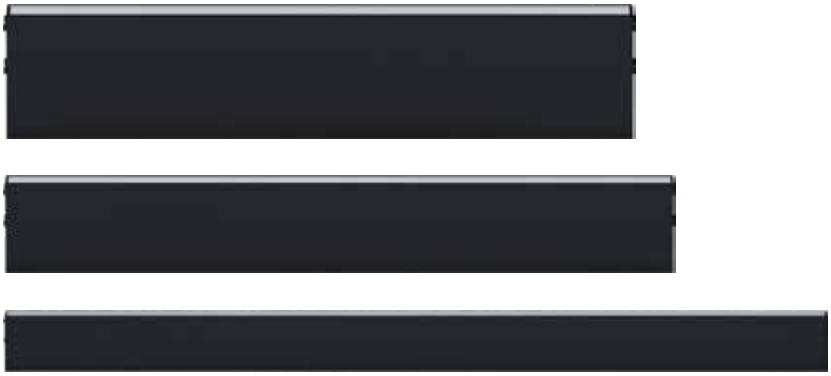

SLIM LED WALL GRAZER LUMINAIRE SERIES

PRODUCT INFORMATION

- Excellently anti-dust LED with professional design to guarantee lighting performance.
- This type of luminaire is suitable for high-end residential applications, museums, offices and hospitality projects.
- It not only ensures high quality of lighting color consistency but also protect products against from harsh environments.
- ILLUS SLIM LED WALL GRAZER Luminaire gives the customer the flexibility to choose between 3 models based on their specific need with lumen package from 300lm to 1200lm.

BENEFITS

- Vivid light color.
- Less maintenance cost and less concerns.
- Equipped with surge protection function.

FEATURES

- High CRI>85.
- Non–Dimmable.
- Good Impact Rating.
- Long lifespan 50000H.
- Operating voltage AC220-240V.

CE RoHS

BEYOND LIGHT..
TO THE LAST DETAILS!

AREAS OF APPLICATION

Shopping Center

Commercial

Educational Center

[redacted]

TECHNICAL OPERATING & ELECTRICAL DATA

Body Color	Black
Body Material	Aluminum
Rated CRI	>85
Voltage & Frequency	AC220-240V, 50/60Hz
IEC Classification	Class I
Dimming	Non-Dimmable
IP Rating	IP67
IK Rating	IK06
Ambient Temperature	-20°C~45°C
Beam Angle	20°*30°
Saving Energy	Energy Saving
Lifespan	50000H
Switching Cycle	100000X on/off
Warranty Period	36 Months

SPECIFICATIONS

Code No.	Model No.	Power	Lumen	Efficacy	CCT	Current	D.F	P.F
LI615566	ILS36AWGLL830WW02	36W	1200lm	32.33lm/W	3000K	310mA	0.97	0.48
LI615567	ILS18AWGLL830WW02	18W	500lm	27.78lm/W	3000K	160mA	0.98	0.46
LI615568	ILS10AWGLL830WW02	12W	300lm	25lm/W	3000K	120mA	0.97	0.44

DIMENSIONS

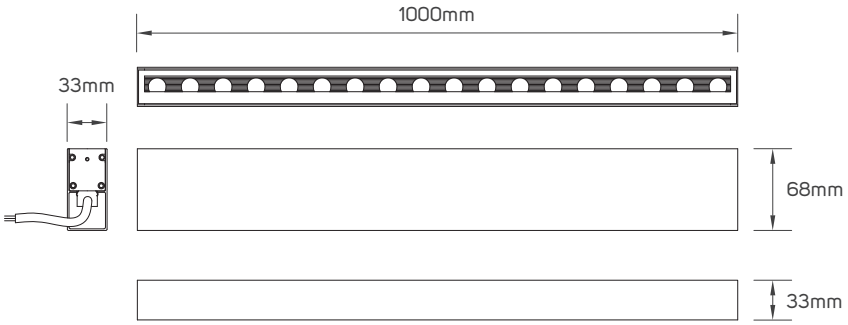

LI615566 (Cutting Size L1005MM-W36MM)

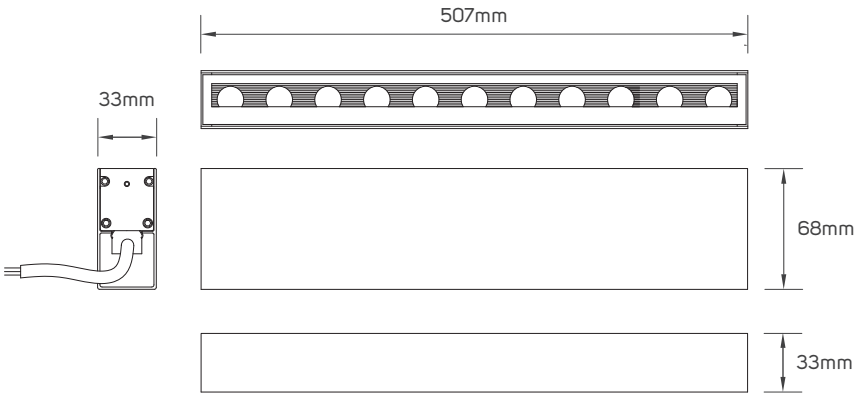

LI615567 (Cutting Size L512MM-W36MM)

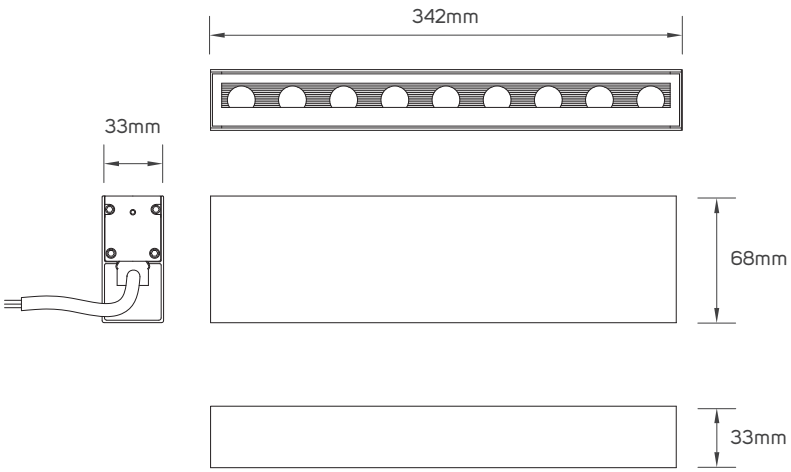

LI615568 (Cutting Size L347MM-W36MM)

ACCESSORY SPECIFICATION

Code No.	Body Color	Body Material
LI615569	Black	StainlessSteel+Aluminum

ACCESSORY DIMENSION

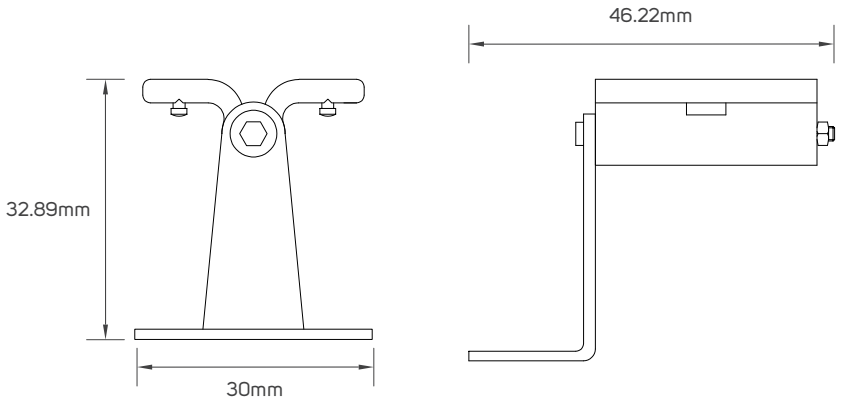

LI615569

APPLICATION PICTURE



SLIM LED WALL GRAZER LUMINAIRE SERIES

**BEYOND LIGHT..
TO THE LAST DETAILS!**

build-station lighting stores illus lighting

C/ Cuenca, 87, Alaquas 46970, (Valencia) Spain, Ph. 34 961 623 958 www.illusillumination.com

illus illumination reserve the right to make dimensional, design and technical alternations without prior notice. illus illumination endeavor to ensure that any advice, recommendation or information it provides in product literature is accurate and correct. However due to the fact that illus do not have direct control on where and how the products are installed, illus illumination cannot accept any liability either direct or indirect arising from the use of illus products whether or not in accordance with any advice, specification, recommendation or information provided by illus illumination or its distributors.

1119202IV1